TTA MOUNT SERIES:

Dimensions & Performance Characteristics

TTA SERIES

Dimensional Drawing

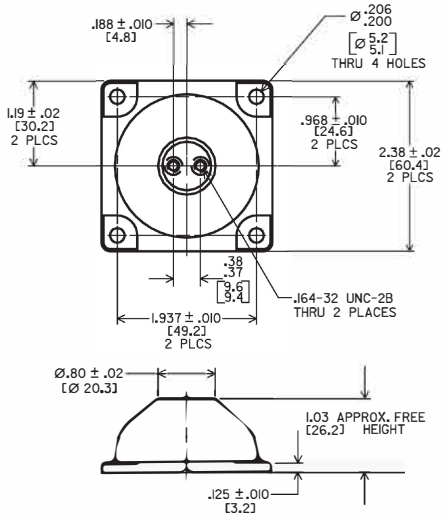

OPTIONAL RESTRAINING STRAP

Dimensional Drawing - Part #880749-02804

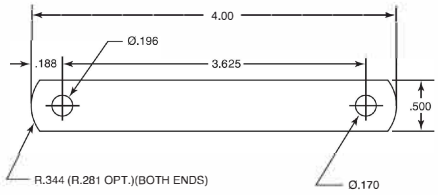

*Please note, mounts are not inherently fail-safe.
They may require the use of a suitable restraining device.
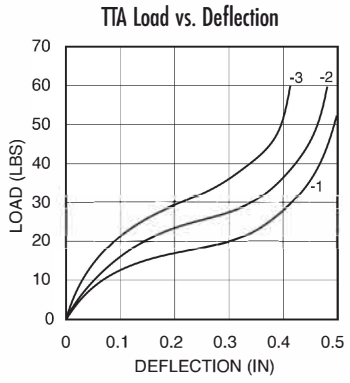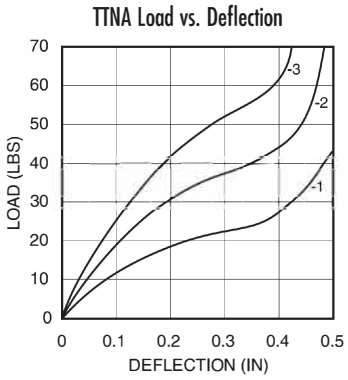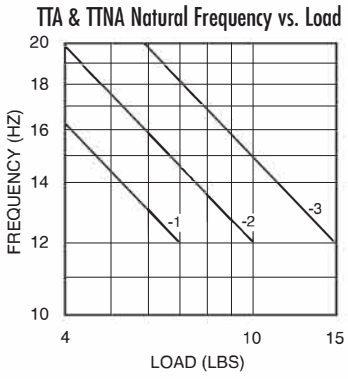
TTA SERIES ORDERING INFORMATION		
PART #		LOAD RANGE (lbs.)
Neoprene	Silicone	
TTNA-1	TTA-1	5-7
TTNA-2	TTA-2	7-10
TTNA-3	TTA-3	10-15