# H-MOUNT SERIES: H64

## Dimensions & Performance Characteristics

### H64 Dimensional Drawing

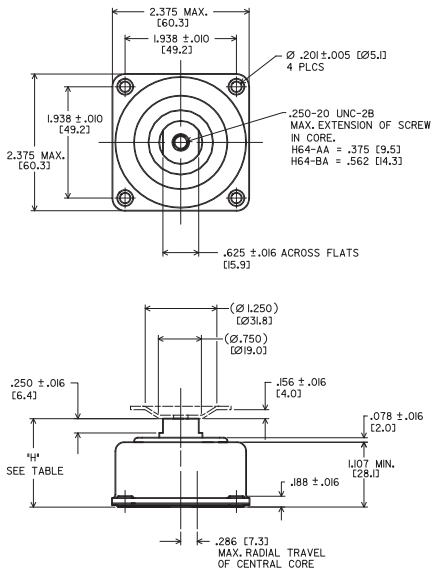


| "H" | | |
|---|---|---|
| TYPE | H64-AA | H64-BA |
| MIN. COMPRESSED | .98 [24.9] | 1.14 [29.0] |
| APPROX. UNDER MIN. LOAD | 1.41 [35.8] | 1.57 [39.9] |
| MAX. EXTENDED | 1.54 [39.1] | 1.70 [43.2] |

**LOAD RANGES**

| Part # | Static Load Range (lbs.) |
|---|---|
| H64-AA-4 & BA-4 | 2-4 |
| H64-AA-6 & BA-6 | 3-6 |
| H64-AA-10 & BA-10 | 5-10 |
| H64-AA-15 & BA-15 | 9-15 |
| H64-AA-20 & BA-20 | 14-20 |
| H64-AA-30 & BA-30 | 18-30 |
| H64-AA-40 & BA-40 | 25-40 |

### H64 Load vs Natural Frequency

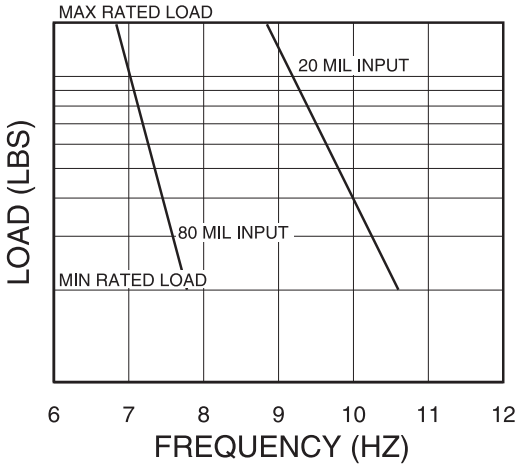

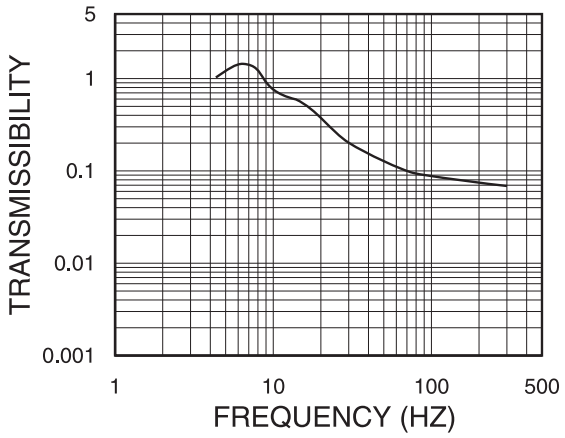
### Typical Transmissibility (H44 & H64 Series)